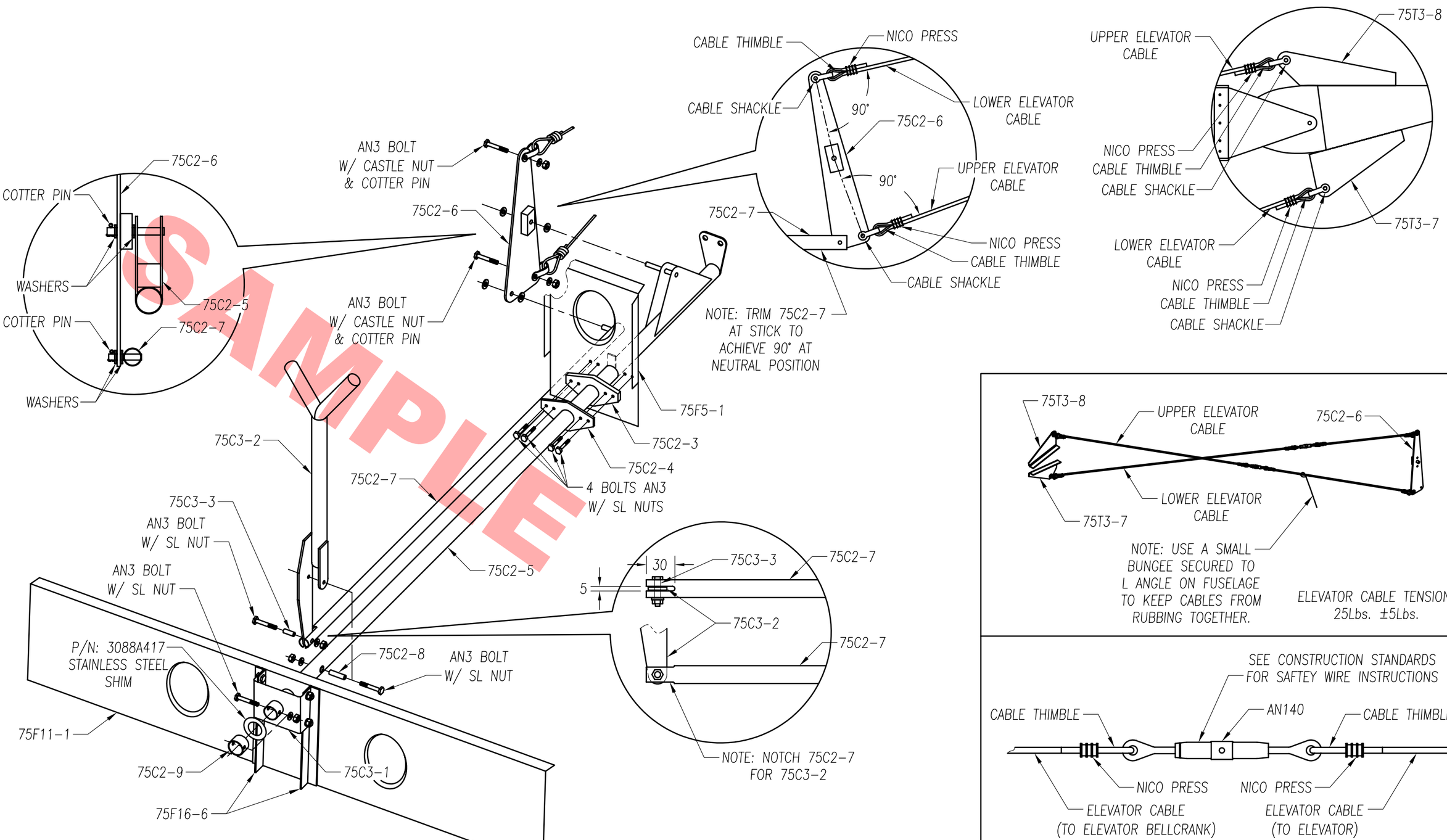

SAMPLE

STOL CH 750	ELEVATOR CONTROLS	75-CA-2
	copyright © 2008 CHRIS HEINTZ zenithair.com	DATE: 05/09